REVISIONS				
ZONE	REV	DESCRIPTION	DATE	APPROVED

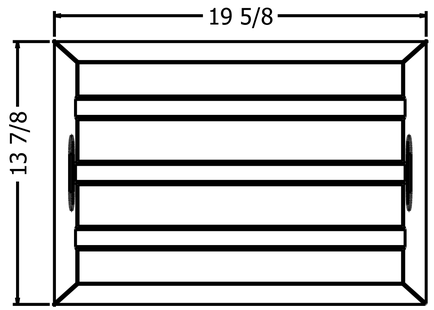

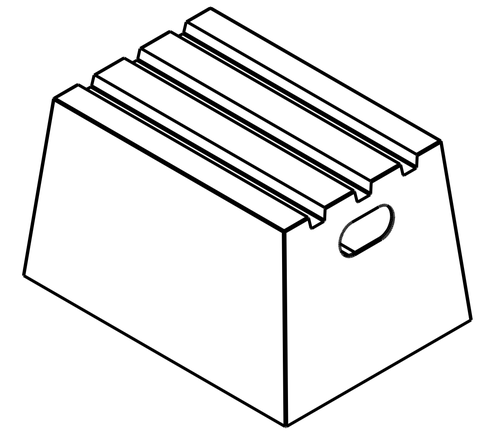

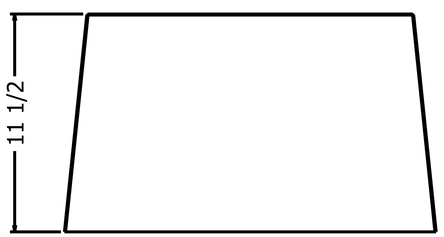

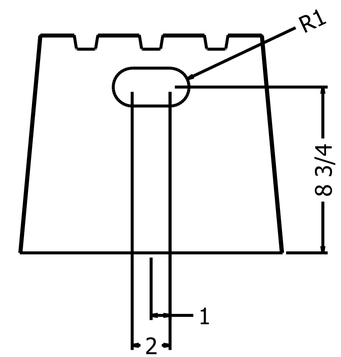

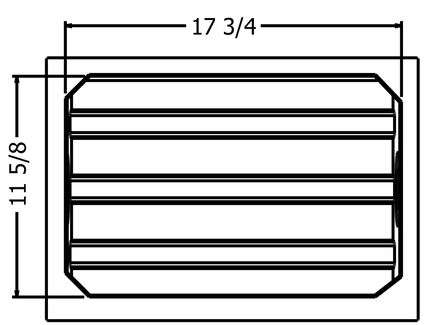

PART WEIGHT: 7.0 LBS.

DRAWN JHN	DATE 6/24/14	DIVERSIFIED PLASTICS, INC.	
CHECKED		ST-1, ONE STEP	
QA			
MFG		SIZE D / FSCM NO.	DWG NO. D-3314.A-4 / REV
APPROVED		SCALE 1:4	SHEET